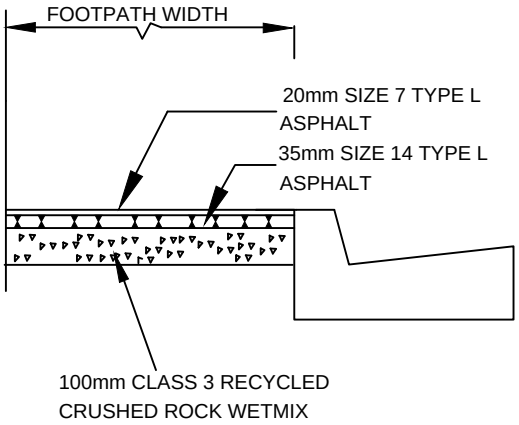

RESIDENTIAL ASPHALT FOOTPATH (RAF)

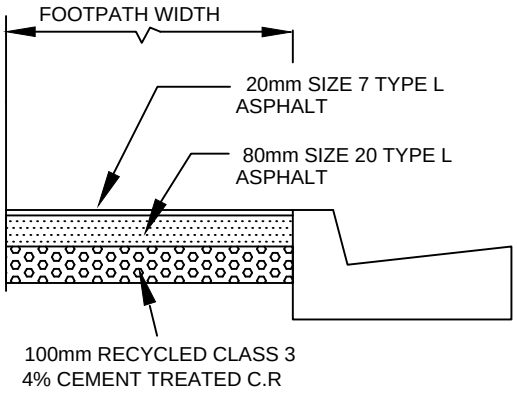

INDUSTRIAL ASPHALT FOOTPATH (IAF)

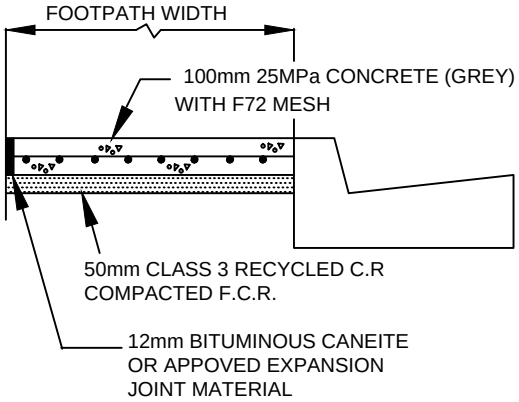

CONCRETE FOOTPATH (CF)

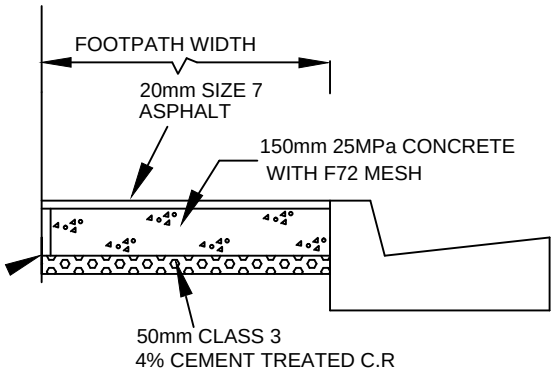

INDUSTRIAL CONCRETE FOOTPATH WITH ASPHALT SURFACE (ICAF)

GENERAL NOTES

1. CROSSFALLS ON FOOTPATH SHALL NOT BE FLATTER THAN 1:40 (2.5%)AND NOT STEEPER THAN 1:20 (5%).
2. TO BE READ IN CONJUNCTION WITH COUNCIL SPECIFICATIONS
3. TYPE OF FOOTPATH TO BE AGREED BY ENGINEER.
4. AT ALL TIMES FOOTPATH WORKS SHALL NOT REDUCE PEDESTRIAN SAFETY. ADEQUATE SAFETY MEASURES MUST BE INSTALLED.
5. REFER YSD 402 -- FOOTPATH DETAILS FOR RETAIL STRIPS.
6. ALL CONCRETE SHALL BE 25 MPa AT 28 DAYS (TO BE CHARCOAL COLOUR AT THE RATIO OF 1 BAG (25kg) FOR EVERY CUBIC METRE OF CONCRETE).

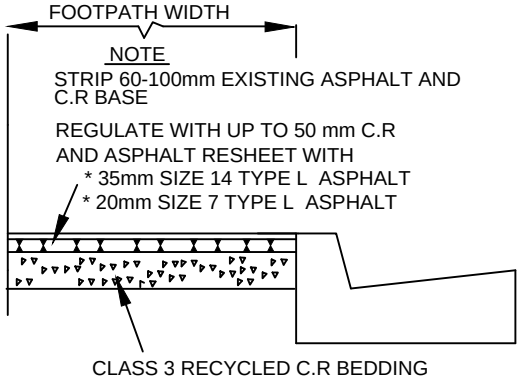

RESIDENTIAL FOOTPATH STRIP AND RESHEET

Yarra Standard: YSD401

Drawing Title:

TYPICAL FOOTPATH DETAILS

Scale at A4 N.T.S

REV	DATE	DRAWN BY
A	08/10/09	HL
B	30/04/12	DKC

CITY OF YaRRA

Richmond Town Hall 333 Bridge Road Richmond PO Box 168 Richmond 3121
Phone (03) 9205 5010 Fax (03) 8417 6666